OFFICIALLY FILED
NEVADA STATE OFFICE
10:00 A.M. February 18, 1987

ORIGINAL

TOWNSHIP 40 NORTH, RANGE 18 EAST, OF THE MOUNT DIABLO MERIDIAN, NEVADA

DEPENDENT RESURVEY

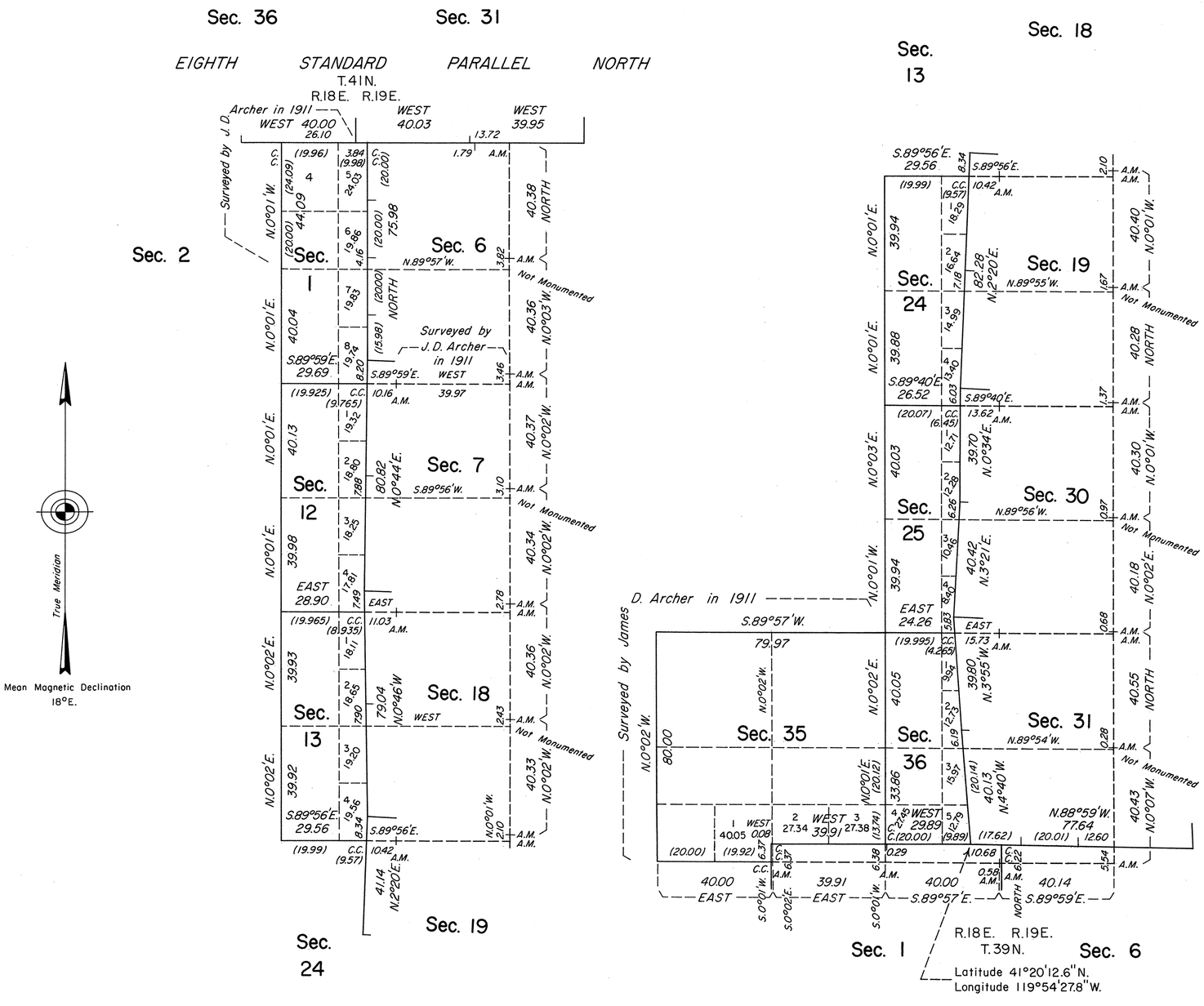

History of the earlier surveys is contained in the field notes.

A dependent resurvey of the Eighth Standard Parallel North, through R. 19 E., and the south boundary and a portion of the west boundary and an independent resurvey of a portion of the west boundary was executed concurrently under T. 40 N., R. 19 E., of this same Group.

This plat represents a dependent resurvey of a portion of the south boundary and a portion of subdivisional lines of T. 40 N., R. 18 E., designed to restore the corners in their original locations according to the best available evidence and the retracement of a portion of the south boundary of T. 40 N., R. 18 E. and the retracement of the west boundary of T. 40 N., R. 19 E.

Areas and lottings, except as shown hereon, are as shown on the plat approved July 24, 1914.

Survey executed by Robert A. Pratt, Cadastral Surveyor, beginning August 29, 1984 and completed October 25, 1985, under Special Instructions dated August 23, 1984 and Supplemental Special Instructions dated October 2, 1985 for Group No. 616, Nevada.

UNITED STATES DEPARTMENT OF THE INTERIOR
BUREAU OF LAND MANAGEMENT

Reno, Nevada February 10, 1987

This plat is strictly conformable to the approved field notes, and the survey, having been correctly executed in accordance with the requirements of law and the regulations of this Bureau, is hereby accepted.

For the Director

Lacel E. Bland

Chief Cadastral Surveyor

JRM